HEAT PUMP

MULTI-PURPOSE TANK

WPPS 200

WPPS 300

WPPS 400

WPPS 500

Austria Email

MULTI-PURPOSE TANK WPPS

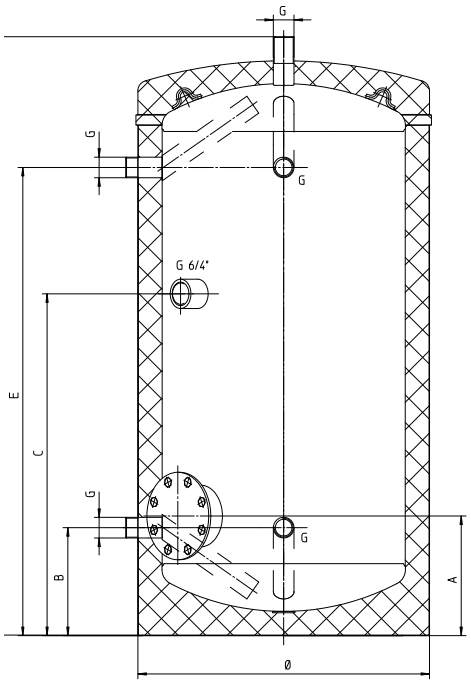

Cross-section
AA

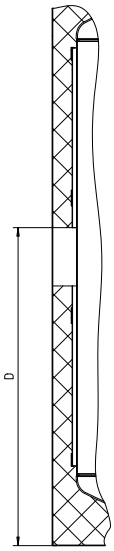

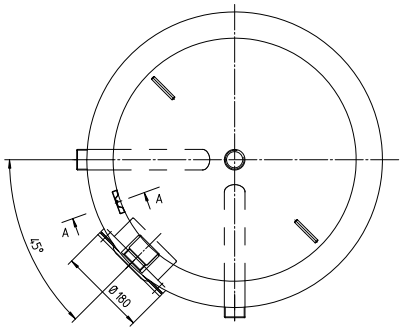

This low-priced buffer tank from the "WPPS" series has been specifically designed for operation with heat pumps. Its capacity of 200 to 500 litres and numerous connection options make this series an ideal complement to your heat pump.

- Steel internal boiler, untreated (St 37)
- Operating pressure 6 bar
- High-quality insulation made from 50 mm directly foamed PU foam
- Powder-coated steel outer cladding in silver-grey (further colours available upon request)
- Flange (D = 180 mm) with a mounted dummy flange and insulation hood (can also be used for finned tube heat exchangers and built-in heaters)
- $^{6}/_{4}$" sleeve for installing an "SH" screw-in electric heater or as an additional connection
- Sensor channel for variable positioning of sensor
- All connections with male threads
- Flange reinforced outer cladding

ACCESSORIES:

- SH screw-in heaters
- EBH built-in electric heaters
- RWT finned tube heat exchanger
- ATH mounted thermometer
- ATR mounted thermometer charge pump controller combination

Refer to the accessories catalogue for further details.

TECHNICAL DETAILS

Type	Dimensions in mm								Diagonal height	Weight in kg
	Ø	A	B	C	D	E	F	G		
WPPS 200	610	246	222	703	654	963	1232	$^{5}/_{4}$"	1310	118
WPPS 300	610	246	222	924	941	1420	1689	$^{5}/_{4}$"	1740	125
WPPS 400	680	339	280	1029	964	1505	1834	$^{5}/_{4}$"	1890	135
WPPS 500	1740	365	276	960	895	1414	1740	2"	1830	170

ECO DESIGN - LABELING

Type	Content in litres	Heat loss in EN 12897		Zapf Profile	Energy Efficiency Class
		in kWh/24h	in Watt		
WPPS 200	200	1,67	69,6	XL	C
WPPS 300	300	2,19	91,3	XXL	C
WPPS 400	400	2,45	102,1	XXL	C
WPPS 500	500	2,72	113,3	3XL	C

Head office and factory: Austria Email AG
A-8720 Knittelfeld, Austriastrasse 6
Phone (03512) 700-0, Fax (03512) 700-239
Internet: www.austria-email.at
E-mail: office@austria-email.at

Customer Service: Phone (03512) 700-297
E-mail: kundendienst@austria-email.at

Sales offices Germany:

Germany North/East
D-14770 Brandenburg, Beetzseeufer 3
Phone 0049/(0)3381 / 766-0
Fax 0049/(0)3381 / 766-244
E-mail: sgobi@austria-email.at

Germany South
D-92637 Weiden/Opf., Parksteiner Strasse 49
Phone 0049/(0)961 / 63 490-0
Fax 0049/(0)961 / 63 490-30
E-mail: ahirmer@austria-email.at

Austria Email

© www.agentur-scharfat – 240.841 – 20150911 – WPPS – Printed on environmentally friendly paper free from chlorine. Technical changes and misprints reserved.