# SPECIAL HOT WATER TANKS

## COMBINED STRATIFIED TANKS

KWS
500, 800, 1000 and 1500
KWS W
500, 800, 1000 and 1500
KWS R2
800, 1000 and 1500

Austria Email

# KWS W COMBINED STRATIFIED TANK
# KWS W NEW TYPE

- High-quality fixing for the stainless steel corrugated pipe
- Stratification device for energy-efficient stratification of heating return
- Second stratification device with the KWS W 800-1000
- For the product Type KWS 800 / 1000 R2 there are 2 off $^{6}/_{4}$“ screw-in sockets for the option of additional electric immersion heaters
- It is possible to connect another buffer tank in series (cascade connection)
- Operating pressure: corrugated pipe 6 bar, buffer tank 3 bar, heat exchanger 10 bar
- New 100 mm ECO SKIN 2.0 insulation

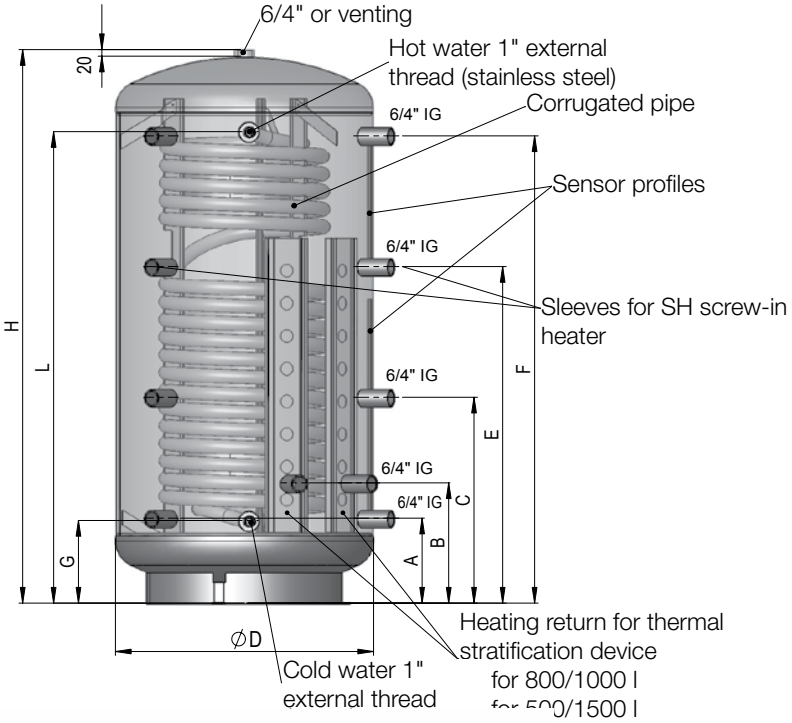


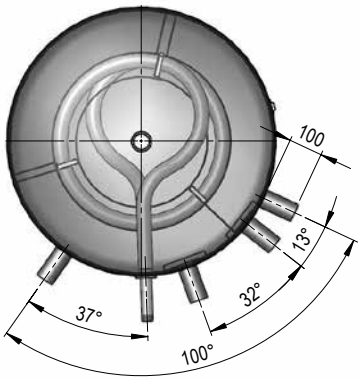


## ECO DESIGN - LABELING

| Type | Content l | Heat loss in EN 12897 in kWh/24h | Heat loss in EN 12897 in Watt | Zapf Profile | Energy Efficiency Class |
|---|---|---|---|---|---|
| KWS 500 W | 500 | 2,10 | 87,5 | 3XL | C |
| KWS 800 W | 800 | 2,66 | 110,8 | 3XL | - |
| KWS 1000 W | 1000 | 3,09 | 128,8 | 4XL | - |
| KWS 1500 W | 1500 | 3,74 | 155,8 | 4XL | - |

## TECHNICAL DETAILS

| Type | Buffer tank capacity in litres | Dimensions in mm without insulation H | ø D | A | B | C | E | F | G | L | Diagonal height in mm | Corrugated pipe (m2) | Stainless steel corrugated pipe capacity in l | Installed length of SH sleeve in mm |
|---|---|---|---|---|---|---|---|---|---|---|---|---|---|---|
| KWS W 500 | 500 | 1640 | 650 | 220 | 335 | 620 | 1010 | 1390 | 220 | 1425 | 1670 | 5 | 25 | 700 |
| KWS W 800 | 800 | 1700 | 790 | 260 | 368 | 630 | 1030 | 1430 | 253 | 1443 | 1750 | 6,5 | 33 | 840 |
| KWS W 1000 | 1000 | 2050 | 790 | 310 | 418 | 745 | 1250 | 1710 | 253 | 1793 | 2090 | 7,5 | 39 | 840 |
| KWS W 1500 | 1500 | 2150 | 1000 | 380 | 470 | 825 | 1350 | 1760 | 306 | 1826 | 2270 | 7,5 | 39 | 1050 |

# COMBINED STRATIFIED TANKS KWS

- High-quality fixing for the stainless steel corrugated pipe
- Large heat exchanger for connection to a solar energy system
- Stratification device for energy-efficient stratification of heating return
- For the product Type KWS 800 / 1000 R2 there are 2 off $^{6}/_{4}$“ screw-in sockets for the option of additional electric immersion heaters
- It is possible to connect another buffer tank in series (cascade connection)
- Operating pressure: corrugated pipe 6 bar, buffer tank 3 bar, heat exchanger 10 bar
- New 100 mm ECO SKIN 2.0 insulation

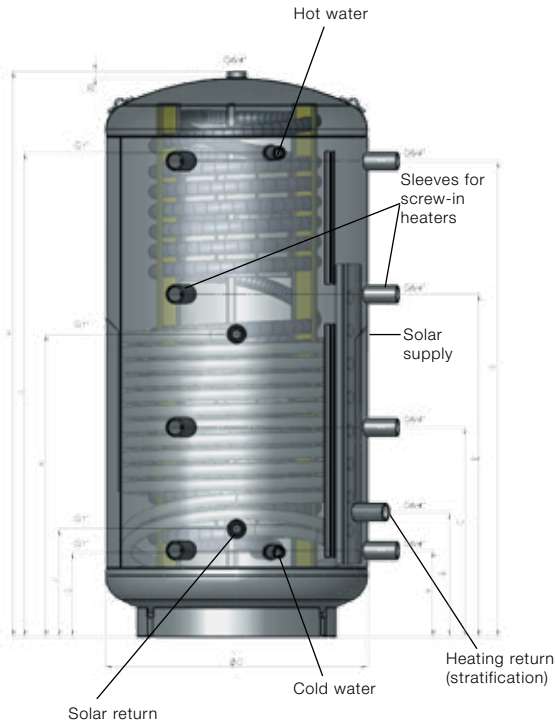


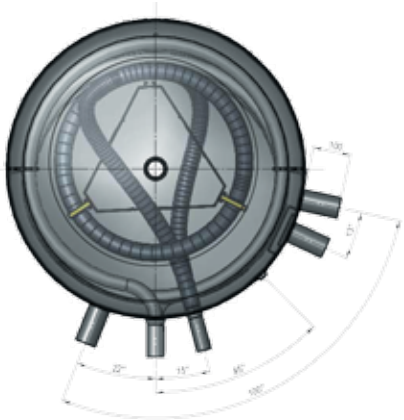

**ECO DESIGN - LABELING**

| Type | Content l | Heat loss in EN 12897 in kWh/24h | Heat loss in EN 12897 in Watt | Zapf Profile | Energy Efficiency Class |
|---|---|---|---|---|---|
| KWS 500 W | 500 | 2,10 | 87,5 | 3XL | C |
| KWS 800 W | 800 | 2,66 | 110,8 | 3XL | - |
| KWS 1000 W | 1000 | 3,09 | 128,8 | 4XL | - |
| KWS 1500 W | 1500 | 3,74 | 155,8 | 4XL | - |

**TECHNICAL DETAILS**

| Type | Buffer tank capacity in litres | Dimensions in mm without insulation | | | | | | | | | | | Diagonal height | Corrugated pipe ($m^2$) | Heat exchanger surface ($m^2$) | Capacity of stainless steel corrugated pipe | Installed length of screw-in heater sleeve |
|---|---|---|---|---|---|---|---|---|---|---|---|---|---|---|---|---|---|
| | | H | ø D | A | B | C | E | F | G | J | K | L | | | | | |
| KWS 500 | 500 | 1640 | 650 | 220 | 335 | 620 | 1010 | 1390 | 220 | 290 | 740 | 1425 | 1670 | 5 | 1,8 | 25 | 700 |
| KWS 800 | 800 | 1700 | 790 | 260 | 368 | 630 | 1030 | 1430 | 255 | 318 | 813 | 1443 | 1750 | 6,5 | 2,5 | 33 | 840 |
| KWS 1000 | 1000 | 2050 | 790 | 310 | 418 | 745 | 1250 | 1710 | 255 | 318 | 948 | 1793 | 2090 | 7,5 | 3,1 | 39 | 840 |
| KWS 1500 | 1500 | 2150 | 1000 | 380 | 470 | 825 | 1350 | 1760 | 306 | 370 | 910 | 1826 | 2270 | 7,5 | 3,5 | 39 | 1050 |

# COMBINED STRATIFIED TANKS KWS R2

- High-quality fixing for the stainless steel corrugated pipe
- Two large heat exchangers for connection to a solar energy system and a second heating source
- Stratification device for energy-efficient stratification of heating return
- For the product Type KWS 800 / 1000 R2 there are 2 off $^{6}/_{4}$“ screw-in sockets for the option of additional electric immersion heaters
- It is possible to connect another buffer tank in series (cascade connection)
- Operating pressure: corrugated pipe 6 bar, buffer tank 3 bar, heat exchanger 10 bar
- New 100 mm ECO SKIN 2.0 insulation

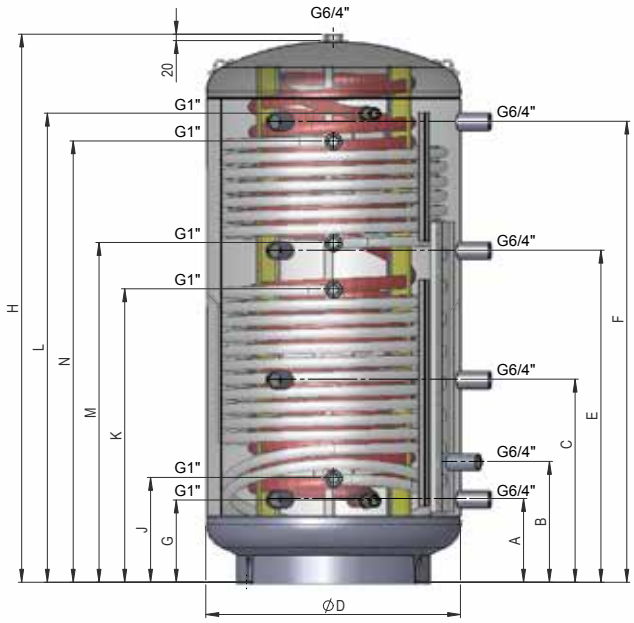


## ECO DESIGN - LABELING

| Type | Content l | Heat loss in EN 12897 in kWh/24h | Heat loss in EN 12897 in Watt | Zapf Profile |
|---|---|---|---|---|
| KWS 800 R2 | 800 | 2,66 | 110,8 | 3XL |
| KWS 1000 R2 | 1000 | 3,09 | 128,8 | 4XL |
| KWS 1500 R2 | 1500 | 3,74 | 155,8 | 4XL |

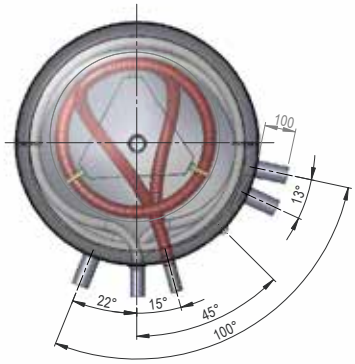


## TECHNICAL DETAILS

| Type | Buffer tank capacity in litres | Dimensions in mm without insulation H | ø D | A | B | C | E | F | G | J | K | L | M | N | Diagonal height | Corrugated pipe (m²) | Heat exchanger surface (m²) | Capacity of stainless steel corrugated pipe | Installed length of screw-in heater sleeve |
|---|---|---|---|---|---|---|---|---|---|---|---|---|---|---|---|---|---|---|---|
| KWS 800 R2 | 800 | 1700 | 790 | 260 | 368 | 630 | 1030 | 1430 | 255 | 318 | 813 | 1443 | 1064 | 1379 | 1670 | 6,5 | 2,5+1,6 | 33 | 840 |
| KWS 1000 R2 | 1000 | 2050 | 790 | 310 | 418 | 745 | 1250 | 1710 | 255 | 318 | 948 | 1793 | 1284 | 1734 | 2090 | 7,5 | 3,1+2,4 | 39 | 840 |
| KWS 1500 R2 | 1500 | 2150 | 1000 | 380 | 470 | 825 | 1350 | 1760 | 306 | 370 | 910 | 1826 | 1310 | 1760 | 2270 | 7,5 | 3,5+2,4 | 39 | - |

*Standby energy consumption in kWh/24h according to EN 12897


Head office and factory: Austria Email AG
A-8720 Knittelfeld, Austriastrasse 6
Phone (03512) 700-0, Fax (03512) 700-239
Internet: www.austria-email.at
E-mail: office@austria-email.at

Customer Service: Phone (03512) 700-297
E-mail: kundendienst@austria-email.at

Sales offices Germany:

Germany North/East
D-14770 Brandenburg, Beetzseeufer 3
Phone 0049/(0)3381 / 766-0
Fax 0049/(0)3381 / 766-244
E-mail: sgobl@austria-email.at

Germany South
D-92637 Weiden/Opf., Parksteiner Strasse 49
Phone 0049/(0)961 / 63 490-0
Fax 0049/(0)961 / 63 490-30
E-mail: ahirmer@austria-email.at


Austria Email