Operating and assembly instructions

Pressure-proof electric water heater
of the model-series VACUMAIL
50 bis 150 Liter

Please pass on to the end user

Austria Email

Id.Nr.: 234660-8 ▪ GB

Dear Customer,

Following your decision to purchase a hot water heater with an electric storage tank produced by our company

We should like to thank you for selecting one of our products.

We are supplying you with an attractively designed product that is built according to the state-of-the-art and which meets the currently applicable regulations. The highly developed enamelling process that is the result of continuous research together with continuous quality inspections during production combine to give our hot water storage tanks technical features which provide significant benefits for you. Thanks to the environmentally friendly CFC-free insulating foam an extraordinarily low standby energy consumption is guaranteed.
The installation and the initial commissioning may only be carried out by an authorised installation company as per these instructions.
This small brochure contains all of the important instructions for the correct assembly and operation. Despite this, however, the functioning of the appliance should be explained to you and the servicing carried out by your dealer. At the same time, please note that our company is at your disposal to give advice on matters of customer service and sales.

We hope that you enjoy using your electrical storage unit.

Austria Email

Contents Page

1. Function

The domestic hot water stored in the enamelled inner boiler is heated by the electrical heating element. The end-user can preselect the desired temperature on the setting toggle. The heating is switched on independently by the temperature control system during the heating-up times that have been set by the responsible electricity supply company and switched off after reaching the desired storage water temperature.. Should the water temperature become lower, for example due to water being removed or to natural cooling-down (the high quality CFC-free polyurethane foam insulation keeps this as low as possible), then the heating system of the appliance switches itself back on until the pre-set storage tank water temperature is reached.

2. Hot water requirement

The hot water requirements in the household depend on the number of persons, on the sanitary installations in the apartment or house, on the installation, on the piping and on the individual habits of the consumers.

The following table gives some guidelines on consumption figures.

	Hot water demand in litres		Required storage water quantity in litres	
	at 37 °C	at 55 °C	with 80 °C	with 60 °C
Full bath	150 - 180		55 - 66	78 - 94
Shower	30 - 50		11 - 18	16 - 26
Washing hands	3 - 6		1 - 2	1,6 - 3,1
Hair wash (short hair)	6 - 12		3 - 4,4	4,2 - 6,3
Hair wash (long hair)	10 - 18		3,7 - 6,6	5,2 - 9,4
Use of bidet	12 - 15		4,4 - 5,5	6,3 - 7,8
Washing dishes				
for 2 persons per day		16	10	14
for 3 persons per day		20	12,5	18
for 4 persons per day		24	15,2	21,5
House cleaning per bucket of cleaning water		10	6,3	9

The temperature of the necessary cold water for mixing at the given hot water temperature has been assumed as being approximately 12°C.

3. Energy-saving

Our electrical storage tanks are real energy savers as a result of the high quality .environmentally-friendly, CFC-free polyurethane foam insulation and the built-in temperature control system.
Low storage water temperatures have proved to be particularly economical. Accordingly, the infinitely variable adjustable temperature should only be as high as the one that has been selected as being necessary for the actual hot water requirements. This helps save energy and reduces lime scale deposits in the storage tank.

4. Standby energy consumption

If a water heater is heated-up and no water is removed for a lengthy period of time after completion of the heating process, a somewhat slow but continuous cooling down of the stored water takes place over the surface of the appliance.
The intensity and speed of this cooling-down process depend on the design of the appliance, as well as on its size, thickness and the quality of the storage tank's insulation.
This behaviour over a period of 24 hours is measured at a storage water temperature of 65°C, with calculations being made of the energy expenditure in kWh that is necessary in order to maintain the water temperature constant over this period of time.

4.1 Model series VACUMAIL

Hot water requirements in litres	50	80	100	120	150
Standby energy consumption in kWh/24 h	0,72	0,95	1,08	1,23	1,45

5. Operation

The requisite operating devices needed to operate the electrical storage unit (temperature control system setting toggle) are located together on the front of the equipment.

This equipment is not suitable for use by persons (including children) with limited physical, sensory or mental capabilities or those who lack experience and/or knowledge, unless they are being supervised by someone responsible for their safety or have received instructions on how the equipment is to be used. Children should be supervised to ensure that they do not play with the equipment.

6. Setting the temperature

To facilitate making adjustments, the adjusting toggle of the temperature control unit of the electric heater has 4 main settings, which are:

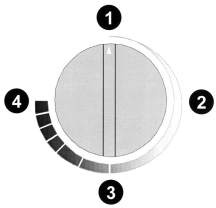

Setting:

❶ Frost protection for the storage tank (up to 30°C)
❷ approx. **40°C**, lukewarm storage water
❸ approx. **60°C**, moderately hot storage water
In order to avoid any accidental scalding with excessively hot water, excluding this setting is recommended.
The equipment operates in a particularly economic manner at this setting.
The heat losses are low and the build-up of boiler scale is avoided to a large extent.
Lower standby energy consumption
❹ approx. **80°C**, moderately hot storage water

Warning:
The adjusting toggle on the left-hand end has no zero setting or off-switch for the heating of the appliance.
When operating with daytime current, the temperature control should not be set any higher than the setting pos. ❸ (approx.60°C).

Based upon the hysteresis of the temperature control unit. (±7K) and possible radiation losses (cooling down of the pipes), the temperature specifications are subject to an accuracy of ±10K.

7. Operating pre-requisites

The storage tanks are to be exclusively installed as per the conditions given on the rating plate. The maximum permitted pressure should correspond to the rated pressure stated on the rating plate. The connection conditions of the local electricity and water supply companies as well as the assembly and operating instructions are to be observed in addition to the legally recognised regulations and standards. The room in which the equipment is to be operated must be frost-free. The assembly of the equipment has to be carried out in one place and taking into account the cheapest method; i.e. the equipment must be easily accessible and capable of being exchanged in the event of any maintenance, repairs and possible exchanging of components being required. The hot water storage tank may only be connected to fixed pipework.
In order to allow for a trouble-free repair, a removal or exchange of the device, it is necessary to establish the connection of the tank by means of a detachable connection (Dutch). Tank leaks as a result of an improper connection and resulting damage and consequential damage are excluded from the warranty and product liability.

In the event of the water containing high quantities of lime, we recommend the upstream installation of a commercially available de-calcification device or having a maximum operating temperature of 60°C (Setting Pos. ❸) In order to avoid any infestations, we recommend the upstream installation of a water filter.
Should a device, at the point of delivery, clearly display a malfunction, damage or other defect, this must not be fitted, installed or used in the system. Subsequent complaints regarding devices with an obvious defect which have been connected and installed are expressly excluded under the warranty and guarantee.

8. Assembly and Safety Instructions

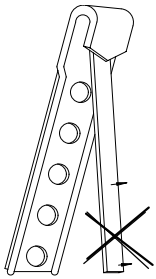

a) Important assembly instruction! Do not bend the suspension hooks to avoid the danger of fracturing Failure to observe this may result in the risk of injury due to the equipment falling down!
b) A wall rail for suspending the upper fixing hook is included in the packaging of each appliance, which should be fastened into the wall using two screws .to support the weight of the equipment. Two further fastening screws are to be provided to act as the lower wall brackets of the equipment (in accordance with the dimensional drawing with the equipment dimensions) to prevent lateral movement. The lower wall bracket has no supporting function and may therefore not be subject to any excessive stress. Lifting and/or supporting the electrical storage heater on the lower wall bracket is prohibited, as this strain can lead to the wall bracket tearing off! Hot water heaters in the suspended version may not be mounted in a horizontal position.
c) During the assembly process the dimensional drawings of the equipment and any possibly included instructions are to be observed. The attachment hook is always to be secured to the rear wall of the tank with at least two screws.
Caution: Only fixing hooks provided by the manufacturer may be used! If the assembly height is changed, this is to be tightened to the mounting screws with a torque of 40 - 50 Nm.
d) **Warning**: The weight of the hot water heater including the weight of the hot water it contains (of the rated capacity) is to be taken into account for any load-related and strength-related dimensioning of the equipment‘s mounting surface or for selecting the mounting location..
Special suspension methods:see thin-walled suspension
e) If a hot water boiler is fitted with surrounds (cladding) in confined, small areas or in false ceilings and similar things, care must be taken to ensure that the connecting side of the equipment (water connections, electrical connection compartment or heat installation) remains freely accessible and that no heat build-up takes place. There must be an unencumbered space of 500 mm for removing the heating flange. A free-space of a minimum of 50 mm above the equipment must be reserved for suspending it on the wall rail.

f) Thought should be given to the selection or to the order of sequence of the installation materials that are to be used with the equipment (take special care with mixed installations) in accordance with the rules of engineering with respect to any possible electrochemical processes (contact corrosion, for example in copper-steel). We recommend installing isolation screw fittings.
g) If there is particularly aggressive water, which requires special solutions in terms of the installation, the possible need for special versions of the storage tank should be looked into (please make enquiries with our representatives or directly with our company)..
h) The equipment is fitted with a safety temperature limiting device, which switches off any further heating of the equipment upon reaching a maximum water temperature of 110°C. The selection of the connecting components (connecting pipes safety valve combinations, etc.) should be carried out in such a way that the connecting components, in the event of any possible malfunctioning of the temperature control system, withstand temperatures of 110°C and avoid any consequential damage.
i) The assembly and installation work may only be performed by duly authorised tradesmen.

9. Dimensional drawing

Thin-wall suspension

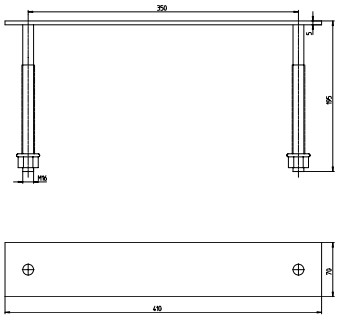

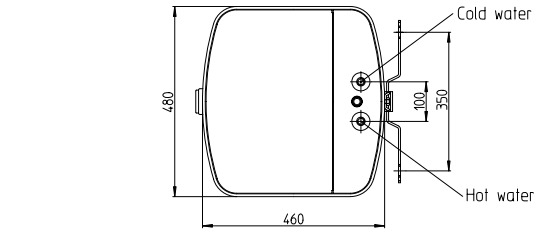

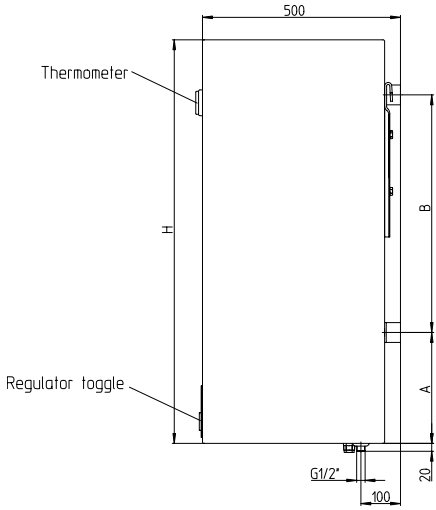

requirements in litres	Type of design	dimensions in mm			weight kg
		H	A	B	
50	Suspended storage unit	569	130	350	30
80	Suspended storage unit	760	280	400	40
100	Suspended storage unit	884	280	600	47
120	Suspended storage unit	1019	280	600	54
150	Suspended storage unit	1219	280	800	64

10. Domestic hot water connection (pressure-resistant)

All warranty for our hot water heaters will be invalidated in the event of the use of unsuitable or non-functioning storage tank connection fittings and any exceeding of the stated operating pressure.
All hot water heaters which display the rated pressure 6 bar (atm or kp/cm2)on the rating plate are pressure-resistant storage tanks and can be connected up so that they are pressure-resistant with a line pressure of up to 5.5 bar (atm). **Should the line pressure exceed this level, a pressure reduction valve must be installed in the cold water line.**
The water connection may only be made via a tested diaphragm safety valve or a diagrams safety valve combination –connection fitting!
A safety valve combination should consist of shut-off, testing, return, drainage and safety valve with expansion water discharge and is to be installed between the cold water supply line and cold water intake (blue) of the storage tank in the designated sequence.

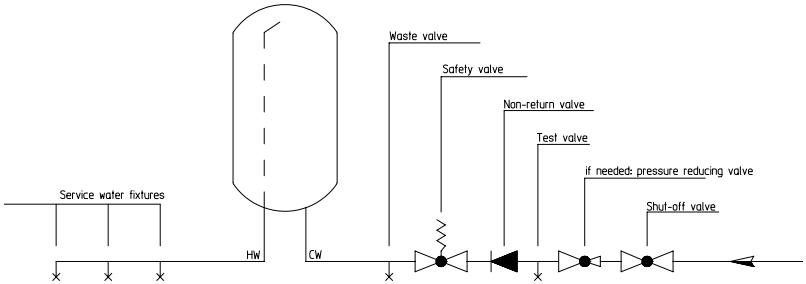

Basically the following items are to be observed:
In order to be able to guarantee the perfect functioning of the connection fittings, these should only be mounted in rooms that are protected against frost. The discharge from the safety valve must be open and be able to be monitored in particular the discharge line from the drip pan (expansion water funnel) may not be channelled into the open air, so that neither frost nor being blocked up with dirt or something similar can be the cause of a breakdown.

Care should also be taken to ensure that the outlet pipe from the safety valve is installed so that it is permanently sloping downwards. The discharge openings of the safety valves (domestic water and heating circuits) must open out into an appropriate drainage object in order to avoid any damage caused by the escape of operating fluid.

No shut-off valve or any other restriction may be installed between the safety valve and the cold water intake. The safety valve must be set at an appropriate pressure, which is less than the rated pressure (6 bar) of the storage tank. Prior to finally connecting up the storage tank the cold water supply line must be flushed through.

After completing the water connection and the bubble-free filling of the storage tank, the connecting fixtures are to be tested to check their correct operation.

a) In order to prevent any blocking of the lifting device of the safety valve as a result of lime-scale deposits, the lifting device of the safety valve should be actuated from time to time during the operation of the equipment.. A check should be made as to whether the valve closes up again after the lifting device has been released and whether the water that is present flows out completely through the funnel or discharge pipe.

b) Should safety valves be built in upstream of the water heaters, a check should be made as to whether the safety valve reacts when the water heater heats up.. This can be ascertained from the outflow of water from the discharge pipe.

Execution: Operator, installing companies
Time interval every 6 months

Maintenance and Repairs:
If there should be no water or a permanent leakage on the safety valve when the water heater is heating up, then the valve should be released by activating the lifting device several times or by trying to flush-out any foreign bodies (e.g. lime-scale particles) that may be present on the sealing component.

If this should not be successful, then repairs should be made by calling in an installing company. In the event of damage to the seating of the valve or sealing ring, the complete safety valve must be exchanged.
Execution: Installation companies
Time interval annually

In order to check the return valve, the shut-off valve should be closed and no water should flow out from the opened check valve.

The operation of the storage tank is performed through the hot water valve of the fixture that is being used (mixer tap). The storage tank is therefore permanently under line pressure. In order to protect the internal boiler against excessive pressure during the heating-up process, the expansion water that results from this is channelled through the safety valve. In order to prevent excess pressure damage to the hot water heater, it is essential that lime-scale encrusted safety valves should be replaced. The return valve prevents the flow back of the hot water into the cold water line network in the event of any reduction in the line pressure and thereby protects the boiler against heating up without water. The storage tank can be separated on the water side via the shut-off valve and thereby also in terms of pressure from the cold water line network and can be emptied if need be via the drain valve.

11. Electrical Connection

11.1 General Instructions

The connection with the power grid must be implemented in conformity with the applicable national regulations and standards, the relevant connecting requirements of the local power company and waterworks, as well as the standards of the Mounting and Operating Instructions, and must be performed exclusively by a licensed electrician. The stipulated protective measures must be executed carefully, so that no other power-supplied devices are affected thereby in the event of a malfunction or failure of the hot water tank's power supply (e.g. freezer, rooms used for medical purposes, units for intensive care, etc.).
In rooms with bathtubs or showers, the device must be installed in accordance with the national laws and regulations (e.g. of ÖVE-SEV, VDE or DIN VDE 0100-701).
The technical connecting requirements (TAB) of the relevant energy supply company must absolutely be observed.
A residual current circuit breaker with a tripping current $I_{\Delta n} \leq 30mA$ must be connected in series before the electric circuit.
The device must only be connected with permanently laid lines.
These types of water heaters are to be supplied exclusively via a hard-wired connection cable and are therefore not suitable for connection via a shock-proof plug (SKI). Accidental activation of the upstream RCD is to be avoided in this way.
An all-pole disconnecting unit with at least 3mm contact clearance must be connected in series before the device. This requirement is fulfilled e.g. by an automatic cutout.
It is imperative that the hot water tank is filled with water prior to electrical start-up.
In accordance with the safety regulations, the hot water tank must be switched powerless, secured against being switched on again and checked for powerlessness prior to any intervention. Interventions to the electrics of the device must only be performed by a licensed electrician.
As a rule, the electrical connection must be performed in accordance with the circuit diagram affixed inside the connecting area of the tank!

11.2 Connection Diagram

L,N ..... Power supply network

Connecting voltage ~230V

50	Litres	4 Hr..	1,15 kW	switchable
		6 Hr.	0.85 kW	
80	Litres	4 Hr..	1,75 kW	switchable
		6 Hr.	1.10 kW	
100	Litres	4 Hr..	2,30 kW	switchable
		6 Hr.	1.65 kW	
120	Litres	4 Hr..	2,75 kW	switchable
		6 Hr.	1.65 kW	
150	Litres	4 Hr..	3,30 kW	switchable
		6 Hr.	2.20 kW	

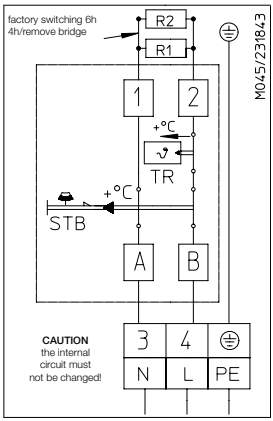

12. Initial Commissioning

The storage tank must be filled with water prior to switching on the electrical power.
Any expansion water which arises in the internal boiler during the heating up process with a pressure resistant connection must seep out from the safety valve.

Warning: The initial heating-up process is to be carried out and monitored by a specialist from the dealer. The hot water outlet pipe and parts of the safety valve/fittings can become hot.

13. De-commissioning, Draining

If a hot water heater should be out of operation or not be used for a long period of time, then it should be drained and disconnected from the main electricity supply at all poles.. Switch off the connecting switch or automatic circuit breakers.
In rooms that are at risk from frost for long periods, the hot water heater should be drained before the commencement of the cold time of year, if the equipment should remain out of operation for several days and not be operated in the frost-protection setting (see Point 6).

The draining of the domestic hot water is carried out after closing the shut-off valve in the cold water supply line by the draining valve of the safety valve combination whilst at the same time opening all hot water valves of the connected fittings that are used. Draining is also possible via the safety valve in the expansion water funnel (drip pan). For this, the small wheel on the safety valve should be rotated to the „Prüfen“ („Test“) setting

Warning: Hot water can escape during the draining process

If there is a risk of frost, you should furthermore be aware that not only the water in the hot water heater and in the hot water pipes can freeze but also the water in all of the cold water supply lines to the valves and fittings that are used as well as in those on the equipment itself. It is therefore advisable to drain off all water-carrying valves and fittings and pipes back as far as the frost-protected part of the domestic water installation (domestic water connection).

If the storage tank is put back into operation, it is essential to ensure that it is filled with water and that bubble-free water is emitted from the hot water valves.

14. Inspection, Maintenance, Care

a) During the heating-up process, the expansion water must be seen to drip from the outlet of the safety valve. When the unit is fully heated-up (approx. 80°C) the expansion water totals approximately 3.5% of the contents of the storage tank.
The functioning of the safety valves should be inspected every month. When raising or rotating the safety valve checking nob into the“Prüfen“ („Test“) setting, the water must flow unimpeded out of the body of the safety valve into the overflow funnel.
Warning: The cold water intake and parts of the storage unit connection fittings can become hot during this process.
Should be hot water heater not be heated up or hot water not be removed, no water may drip from the safety valve. It this should be the case, either the pressure in the water line is too high (install more than 5.5 bar pressure reduction valve) or the safety valve is faulty. Please immediately call the installation specialist.

b) In the event of highly calcified water the removal by a specialist of lime-scale build-up in the inside of the storage unit boiler and of any freely detached lime-scale particles after one to two years of operation may be necessary.
The cleaning process is carried out through the flange opening - remove the heating flange, clean the storage unit and when re-assembling the heating flange, a new seal should be utilised. The specially enamelled internal container of the hot water heater may not come into contact with lime-scale dissolving substances - do not use a lime-de-scaling pump.
The equipment is finally to be fully rinsed out and the heating-up procedure is to be observed as per the initial commissioning.

c) **To be entitled to make claims under the warranty that is offered by Austria Email, the built-in protective anode is required to be inspected by the qualified specialist within a maximum period of every 3 years.** The protective discharge current resistor underneath the heater body fixing screw should not be damaged or removed during maintenance work.

d) No abrasive cleaning material or any paint thinners (such as Nitro, Trichlor, etc.) may be used for cleaning the apparatus. The best thing to use for cleaning is a damp cloth to which a couple of drops of liquid household cleaner have been applied. In hospitals and other public buildings, the prevailing regulations for cleaning and disinfection must be observed.

When carrying out service work it is advisable to also open the cleaning and service flange, in order to inspect the storage tank for possible infestations and contamination and to remove these if need be.

15. Functional breakdowns

If the water storage unit is not fully heated-up please check whether the circuit breaker(disconnect switching device) or the safety fuse has tripped and check the setting of the temperature control unit.

In all other cases do not try to rectify the fault yourself. Please get in touch either with an approved installer or with our customer service department. When making use of qualified specialists it is often only a small amount of manual work and the storage unit is back in running order. Please ensure that you give to the responsible persons the model designation and the serial number, which you will find on the rating plate of your electric storage unit.

Warranty, Guarantee and Product Liability

Warranty is made according to the legal provisions of the Republic of Austria and the EU.

1. The prerequisite for honoring of warranty terms on the part of the manufacturer (hereinafter referred to as Manufacturer) is presentation of a paid invoice for the purchase of the appliance in question, whereby the identity of the appliance including model and fabrication number must be indicated on the invoice and presented by the claim applicant. The General Terms and Conditions, Terms and Conditions of Sale and Delivery of the manufacturer shall apply exclusively.

2. The assembly, installation, wiring and startup of the appliance in question must, to the extent that this is prescribed legally or in the installation and operation guide, have been performed by an authorized electrical technician or installer who has followed all the required regulations. The hot water tank (excluding outer jacket or plastic cover) must be protected from exposure to direct sunlight to prevent discoloration of the polyurethane foam and possible cracking of plastic parts.

3. The area in which the appliance is operated must be kept from freezing. The unit must be installed in a location where it can be easily accessed for maintenance, repair and possible replacement. The costs for any necessary changes to the structural conditions (e.g. doors and passages too narrow) are not governed by the guarantee and warranty declaration and therefore shall be rejected on the side of manufacturer. When erecting, installing and operating the water heater in unusual locations (e.g. attics, interior rooms with water-sensitive floors, closets, etc.), provision must be made for possible water leakage and means provided for catching the water with a corresponding drain to avoid secondary damage in the context of product liability.

4. Warranty claims will not be honored for:
   inappropriate transport, normal wear and tear, intentional or negligent damage, use of force of any kind or description, mechanical damage or damage caused by frost or also by exceeding the operating pressure stated on the rating plate, even if only once, use of connection fittings that do not comply with the standard, use of defective tank connection fittings and unsuitable and defective service fittings. Breaking of glass and plastic components, possible colour differences, damage due to improper use, in particular non-observance of the mounting and operating instructions (Operating and Mounting Instructions), damage by external influence, connecting to incorrect voltage, corrosion damage as a consequence of aggressive waters (water not suitable for drinking) in accordance with the national regulations (e.g. Austrian ordinance on drinking water, TWV – Fed. Law Gazette II No. 304/2001), deviations between the actual drinking water temperature at the tank fitting and the specified hot water temperature of up to 10K (hysteresis of the controller and possible cooling due to pipelines), Continued use, despite the occurrence of a defect, unauthorised modifications to the device, installation of additional components that were not tested together with the device, improperly carried out repairs, Insufficient water conductivity (min. 150 µs/cm) operational wear of the magnesium anode (wearing part), natural formation of boiler scale, lack of water, fire, flood, lightning, overvoltage, power failure or other types of force majeure. Use of non-original and company-external components such as e.g. heating elements, reactive anode, thermostat, thermometer, ribbed tube heat exchanger, etc., Parts installed in an uninsulated condition with respect to the storage tank, ingress of foreign particles or electrochemical influences (e.g. mixed installations), failure to observe the design documents, unpunctual and undocumented renewal of the installed protective anode, no or improper cleaning and operation, as well as any deviations from the standard that reduce the value or functionality of the device only slightly. Fundamental compliance with all regulations in ÖNORM B 2531, DIN 1988 (EN 806), DIN 1717, VDI 2035 or the corresponding national regulations and laws must be ensured.

5. A justified claim must be reported to the closest customer service location of the manufacturer. The latter reserves the right to replace or repair a defective part or to decide whether a defective appliance shall be replaced with a working one of equal value. The manufacturer furthermore expressly reserves the right to require that the purchaser return the appliance in question. The time of a repair or a replacement is determined by the production.

6. Repairs made under warranty are to be performed only by persons authorized by the manufacturer. Replaced parts become the property of the manufacturer. If any repairs to the water heater become necessary as part of necessary service work, these are charged at the cost of repair and prorated material cost.

7. Any work performed without our express order, even this is done by an authorized installer, will void the warranty. Assumption of the costs for repairs performed by third parties presumes that the manufacturer was requested to eliminate the defect and did not or did not in timely fashion meet his obligation for replacement or repair.

8. The warranty period will not be renewed or extended as a result of a guarantee and warranty claim, service or maintenance work.

9. Transport damage will only be inspected and if appropriate recognized if it has been reported in writing to the manufacturer no later than the weekday following delivery.

10. Claims exceeding the terms of the warranty, in particular those for damage and consequential damages, are precluded insofar as these are legally permissible. Pro rata work times for repairs as well as the costs for restoring the equipment to its original condition must be paid in full by the purchaser. The guarantee provided extends according to this guarantee declaration only to the repair or replacement of the appliance. The provisions of the Terms of Sales and Delivery of the manufacturer remain, insofar as they are not altered by these guarantee conditions, fully in effect.

11. There is a charge for services provided outside of the context of these guarantee conditions.

12 In order for a warranty claim to be honored by the manufacturer, the appliance must be paid for in full to the manufacturer and the claimant must have met all his obligations to his vendor in full.

13. The enamelled internal boiler for water heaters is warranted for the specified period from the delivery date provided all warranty terms described under Points 1 to 12 are observed with in full. If the warranty terms have not been met, the legal warranty requirements of the respective country from which the appliance was shipped shall prevail.

14. Claim satisfaction according to prevailing Austrian Product Liability Law:
Claims for compensation under the title of product liability are only justified if all prescribed measures and necessities for fault-free and approved operation of the appliance have been met. This includes among other things the prescribed and documented anode replacement, connection to proper operating voltage, prevention of damage due to improper use, etc. From these conditions it can be concluded that if all requirements are met (norms, installation and operation guide, general guidelines, etc.), the device or product fault resulting in the secondary damages would not have occurred. Furthermore it is mandatory that for processing of the claim the necessary documentation such as the part number and manufacturing number of the water heater, the seller's invoice and that of the executing license holder as well as a description of the malfunction for a laboratory study of the appliance in question (absolutely required, since a specialist will study the appliance and analyze the cause of failure) be provided. To prevent misidentification of the water heater during transport, it must be marked with a highly visible and legible marking (preferably including address and signature of the end customer). Corresponding pictorial documentation indicating the extent of the damage, the installation (cold water line, hot water outlet, heating outgoing and return, safety fixtures, expansion tank if present) as well as the defect location on the water heater is also required. Furthermore the manufacturer reserves the express right to require that the purchaser provide all the documents and equipment and equipment parts necessary for clarification. The prerequisite for performing services under the title of product liability is that it is the claimant's obligation to prove that the damage was caused by the manufacturer's product. Damage compensation according to the Austrian Product Liability Law is subject to a 500 Euro deductible. Until the entire matter is clarified and the circumstances as well as determination of the causal factors are established, the manufacturer is held faultless. Non-observance of the operating and installation guide and/or the relevant norms is considered negligent and will result in a liability disclaimer within the scope of compensation for damages.

The illustrations and data are not binding and may be modified without notice when technical improvements are made.
Subject to printing errors and technical changes.

Austria Email AG
Austriastraße 6
A-8720 Knittelfeld
Telefon: (03512) 700-0
Fax: (03512) 700-239
Internet: www.austria-email.at
E-Mail: office@austria-email.at

Austria Email in your area?
For addresses and telephone numbers of our subsidiaries, visit our homepage at **www.austria-email.at**

Brandenburg
Beetzseeufer 3
D-14770 Brandenburg/Havel
Tel.: +49 3381 766-0
Fax: +49 3381 700-244
E-Mail: sgobi@austria-email.at

Weiden
Parksteiner Straße 49
D-92637 Weiden/Oberpfalz
Tel.: +49 961 63490-0
Fax: +49 961 63490-30
E-Mail: ahirmer@austria-email.at

Id.Nr.: 234660-8 ▪ GB